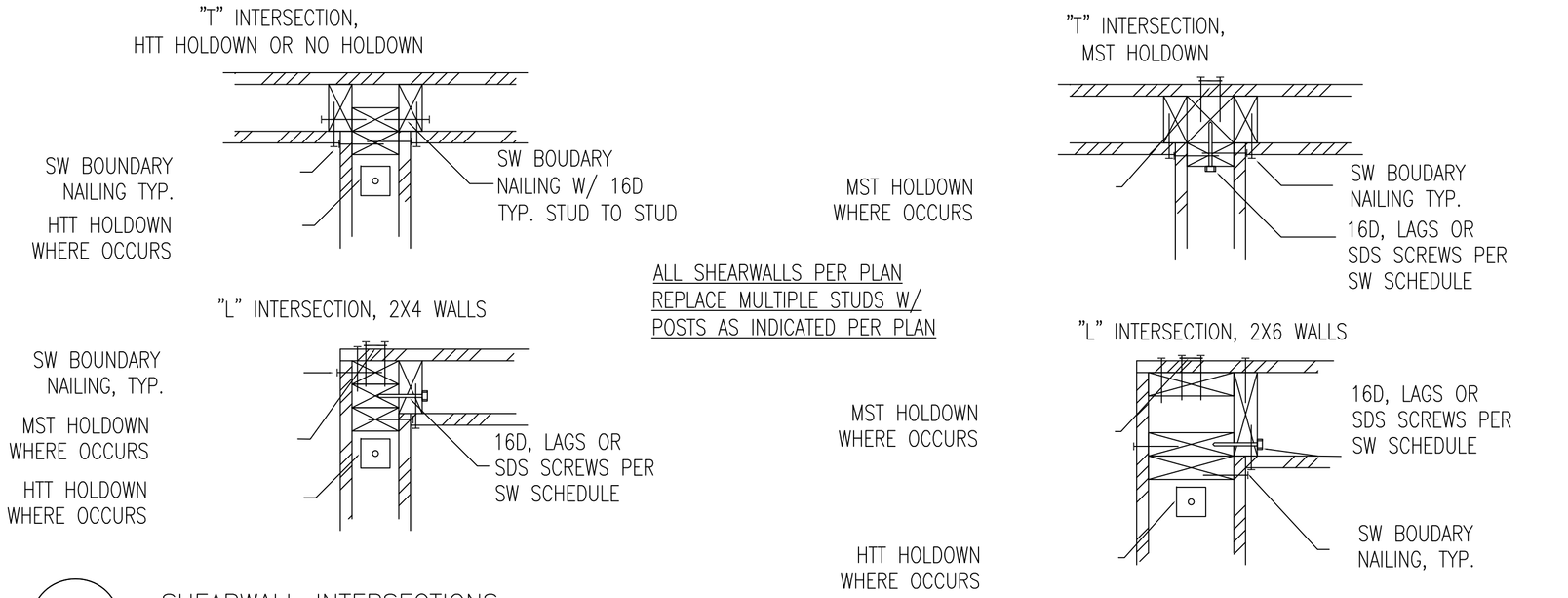


14 SHEARWALL INTERSECTIONS

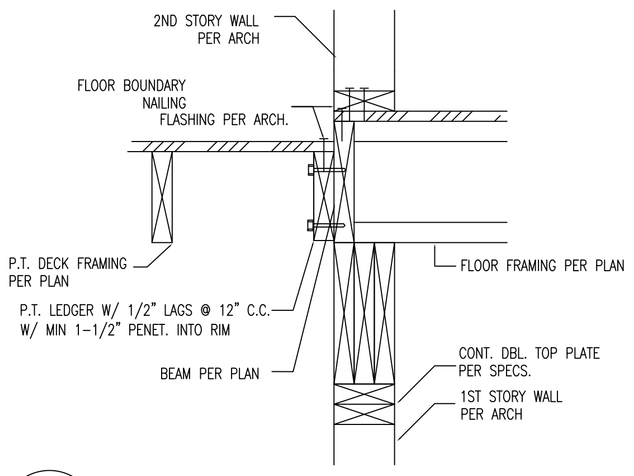


13 DECK FRAMING DETAIL

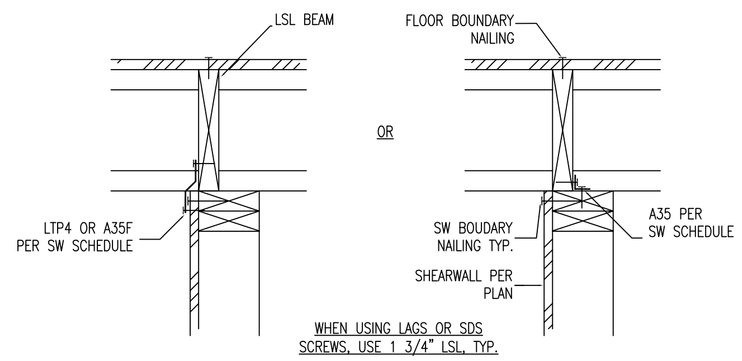


11 TYP. SHEAR TRANSFER AT FLOOR

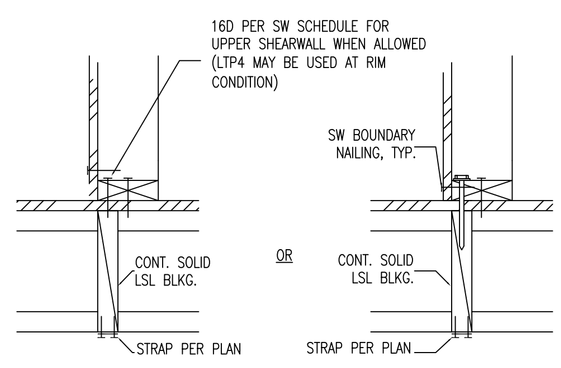


10 TYP. SHEAR TRANSFER AT FLOOR

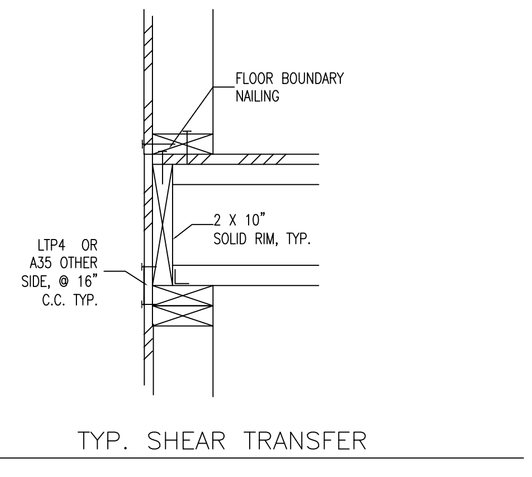


9 TYP. SHEAR TRANSFER

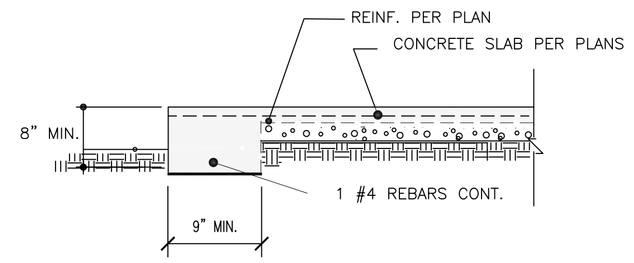


8 SLAB EDGE DETAIL

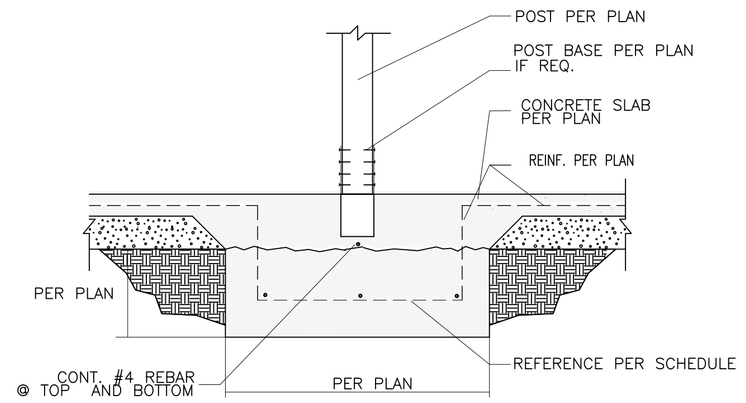


7 SPREAD FOOTING

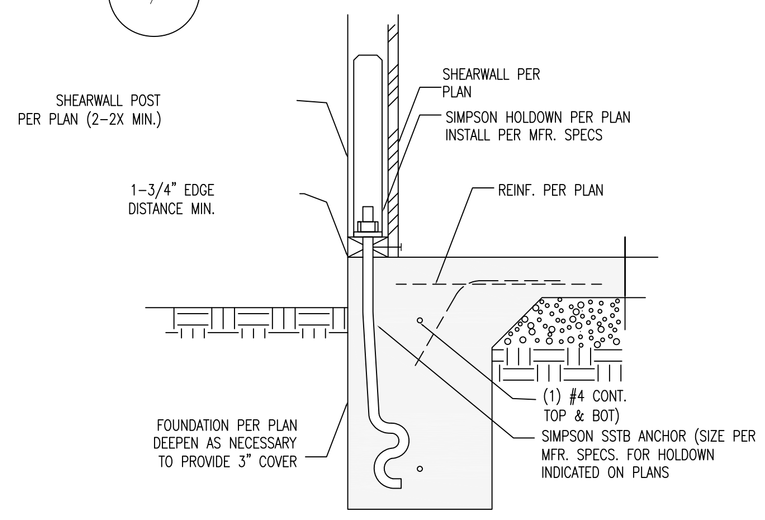


6 TYP. HOLDOWN TO FOUNDATION

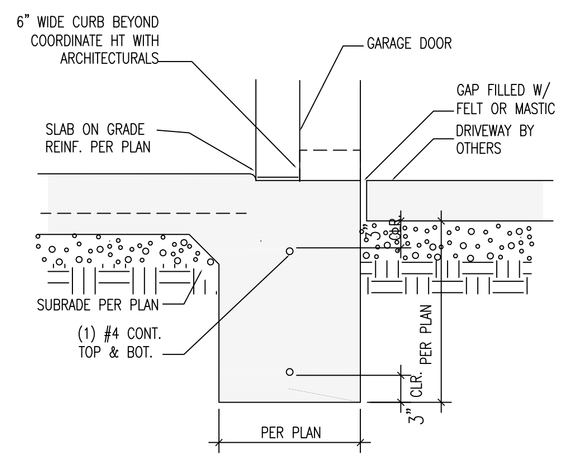


5 FOUNDATION AT GARAGE DOOR

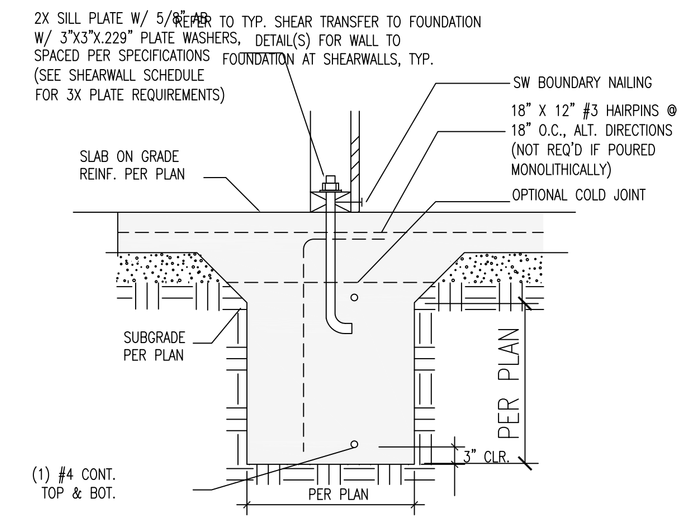


4 TYP. INTERIOR FOUNDATION

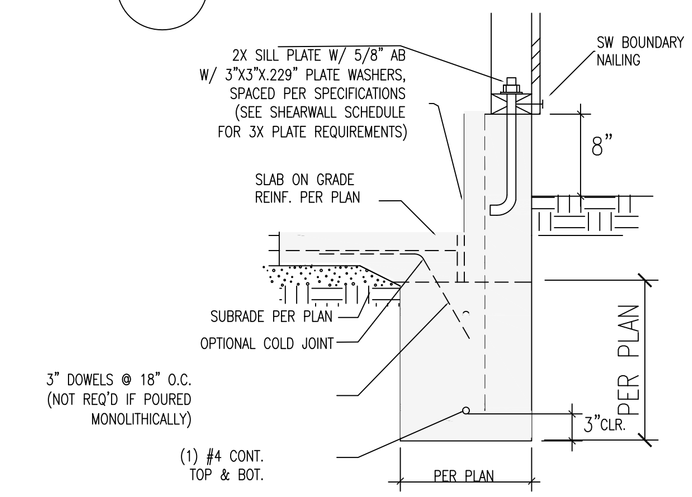


3 FOUNDATION WITH CURB

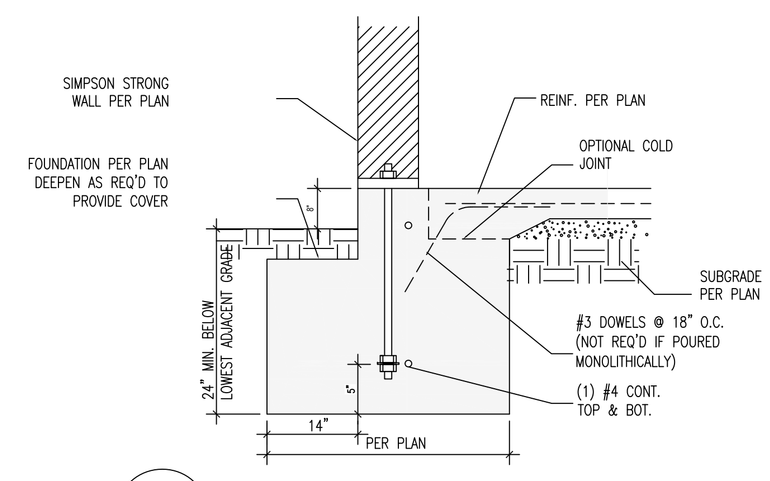


2 TYP STRONGWALL FOUNDATION

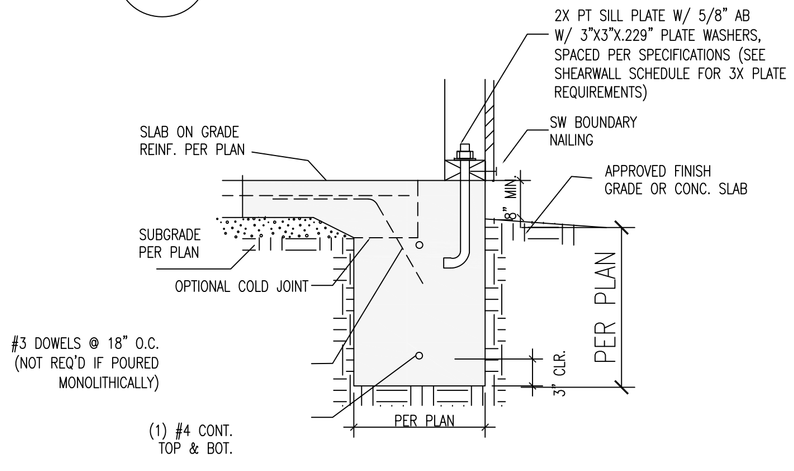


1 TYP. EXTERIOR FOUNDATION

12 STRONGWALL DETAIL

WC & ASSOCIATES

MODIFICATIONS
1 P.C. REV. 4-24-12

WILLIAM CHAMBERS & ASSOCIATES
2425 FAIR OAKS BLVD. SUITE 1
SACRAMENTO, CA. 95825
(916) 779-0691

| | |
|---|---|
| PROJECT NO. | NUMBER |
| DATE | DATE |
| DRAWN BY: | DRAFTER |
| CHECKED BY: | CHECKER |
| CAD SAVED NAME: | NUMBER |

FOUNDATION DETAILS

Project Name:

TITLE
DETAILS

SHEET
D2

#OF#